RR301

Quick Start Guide

Welcome to your new Remote Reader. The **RR301** is an advanced meter reading solution that provides a high visibility remote display of one or two utility meters. Getting the Remote Reader set up and installed is quick and easy. A version that includes built-in wireless AMR support is available (RR301-TR).

Packaging Contents

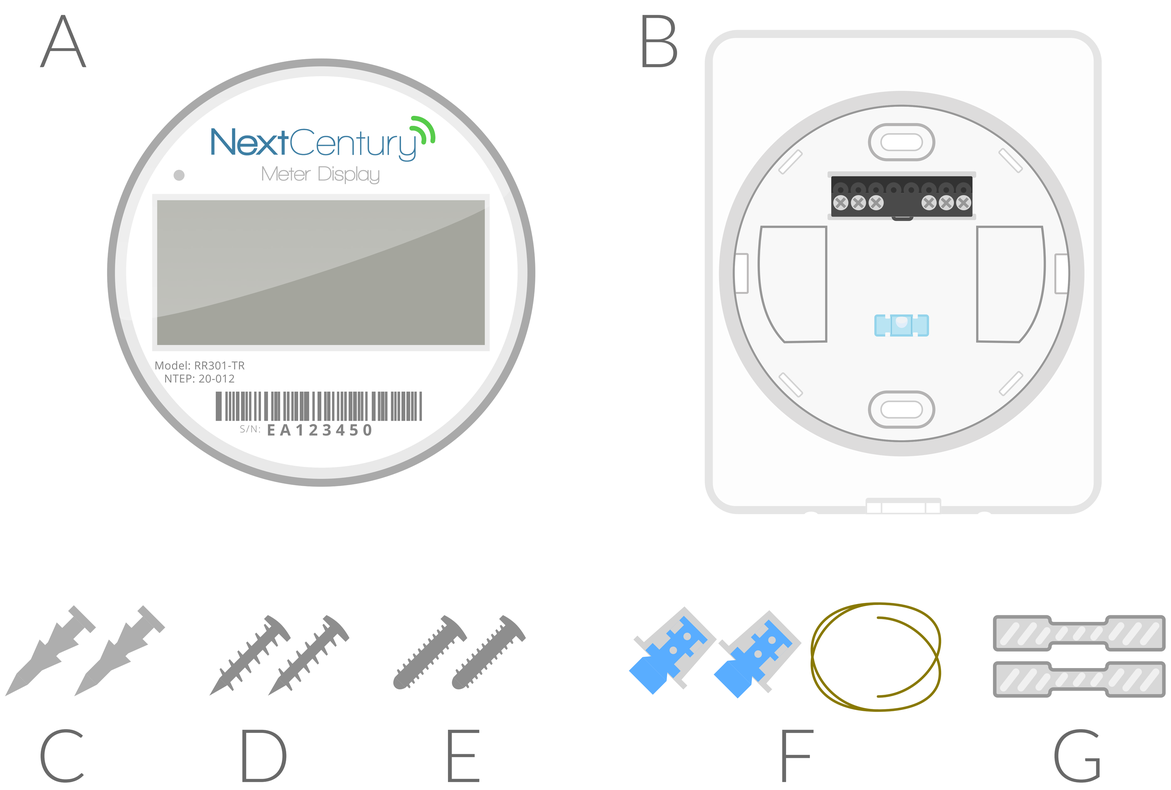

A) RR301 Remote Reader

B) Mounting Plate

C) Sheetrock Anchors

D) Wall Mount Screws #6-20

E) Box Mount Screws #6-32

F) Wire Security Assembly

G) Security Seal Sticker Tabs

Important

During installation, you will disconnect the Remote Reader from the Mounting Plate. It is not necessary to open the Remote Reader. The Remote Reader is a sealed, water-tight design, and should only be opened every 10 years (approximately) to replace the internal battery.

Additional Resources

For full installation guide, spec sheets, and additional resources, please visit:
products.nextcenturymeters.com/rr301

Contact Information
Phone: 844.538.8203
Email: support@nextcenturymeters.com

RR301

Installation

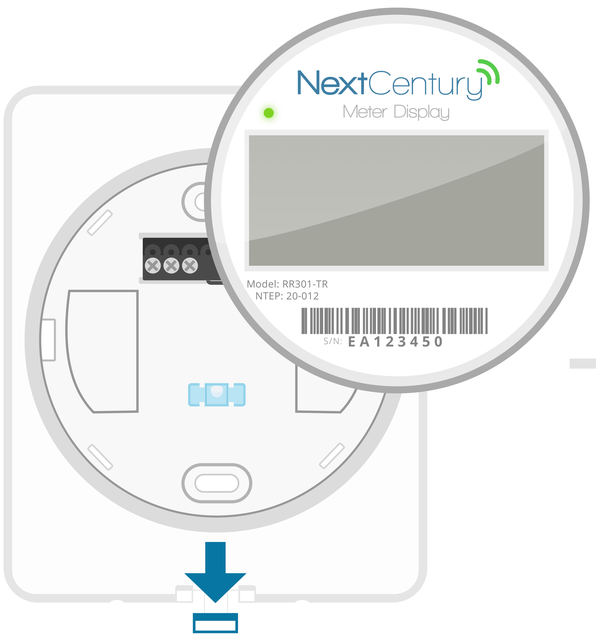

Pull Down Security Tab to Remove Remote Reader from Mounting Plate

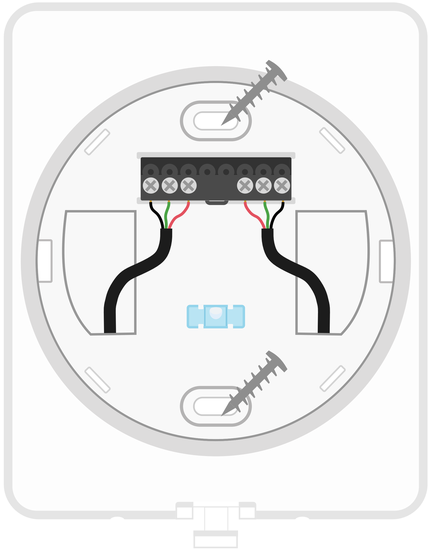

Secure Remote Reader to a wall and connect up to two meters

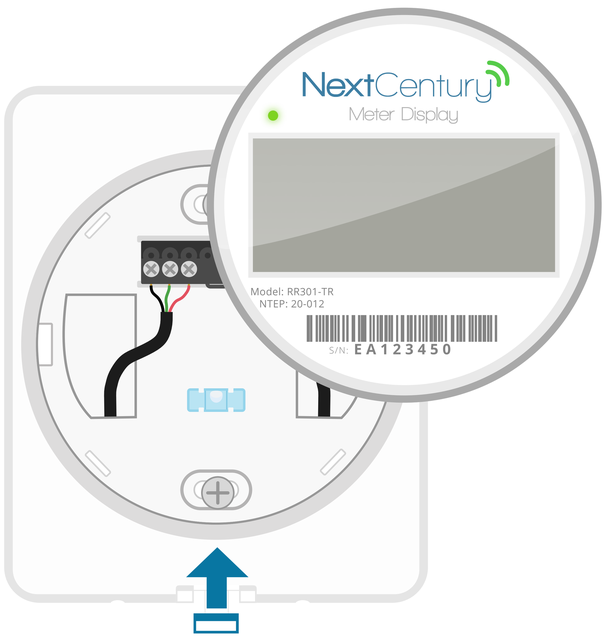

Connect Remote Reader to Mounting Plate Then Lock Security Tab

Installation Steps

1) Disconnect the Remote Reader from the Mounting Plate. Remember to first pull down on the Mounting Plate Security Tab.
2) Install the Mounting Plate using the provided anchors and screws, or by connecting to an existing single-gang wall box using the #6 screws (included).
3) Connect the meter/meters' wiring to the Remote Reader Mounting Plate (wiring instructions on the other side of this guide).
4) By default, the Remote Reader is configured to support a single-pulse-type meter. Use the NextCentury **Direct Connect** Programmer (DC301) to program the Remote Reader for other configurations.
5) Test the meter connection:
   - For pulse meters, ensure the pulse-count increments when a pulse is sent from the connected meter.
   - For encoder meters, ensure the proper read is displayed. It may be necessary to tap the display to get the latest encoder meter read.

RR301

Wiring Guide

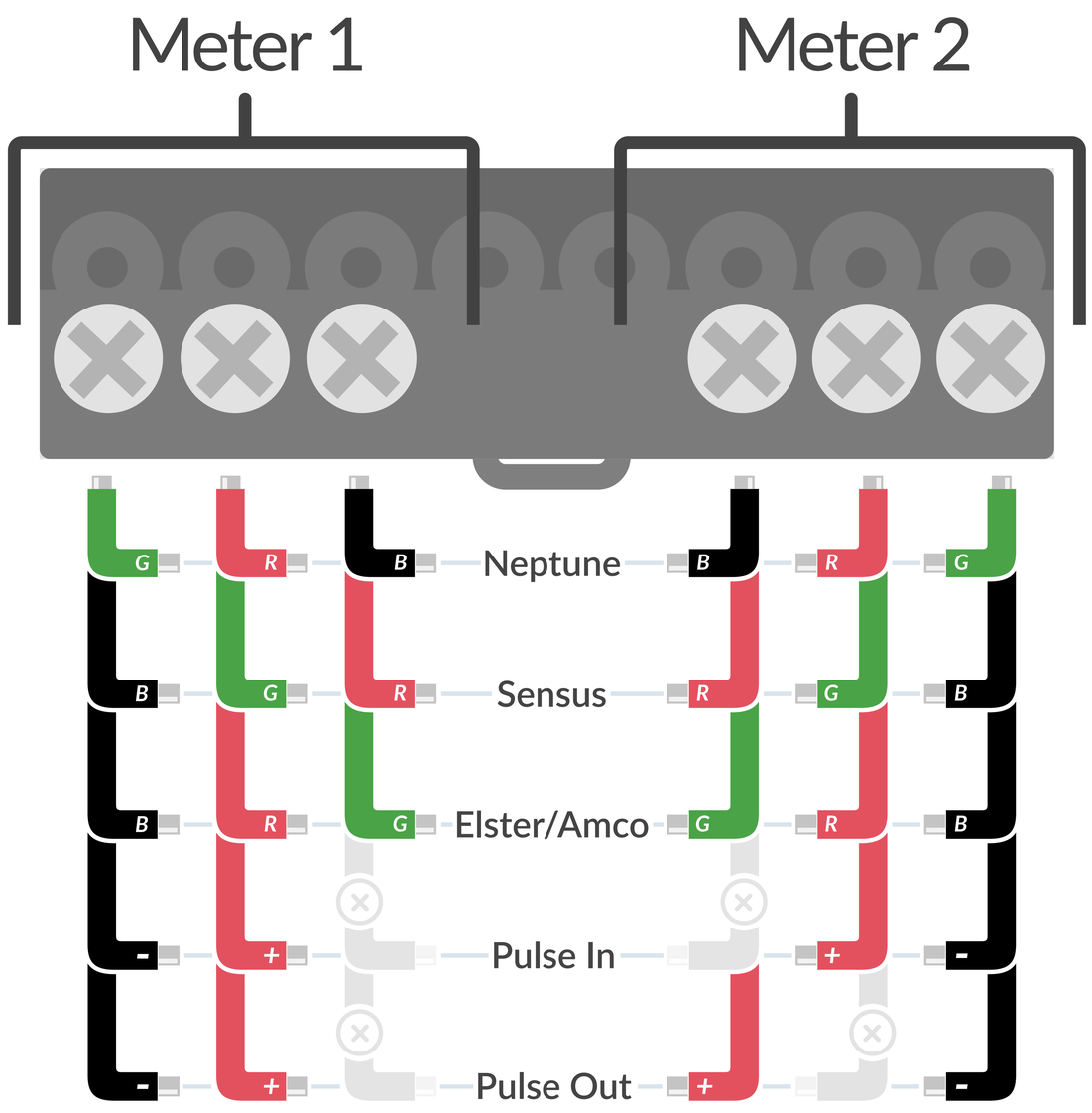

Possible Configurations

- 1x Pulse Meter - *Default* (Meter 1 Port)
- 1x Encoder Meter (Meter 1 Port)
- 2x Pulse Meters (Meter 1 & 2 Ports)
- 2x Encoder Meters (Meter 1 & 2 Ports)
- 1x Encoder & 1x Pulse (Meter 1 & 2 Ports)
- 1x Pulse & 1x Encoder (Meter 1 & 2 Ports)
- 1x Pulse with Pulse Out (Meter 1 & 2 Ports)

Wiring Guide

An interactive Wiring Guide is also available through the NextCentury Mobile App (Android and iOS Support).

Dual Meter+™ Technology

Meter+™ Technology has been developed to allow a single device to connect to virtually all modern meter outputs. These include a variety of different pulse-out meters as well as encoded output meters. Meter+™ Technology supports Sensus, Neptune, Amco, and Elster 3-wire protocols. Simply wire the meter and program the Remote Reader with the proper configuration. The Remote Reader includes Dual (2x) Meter+™ Technology ports, allowing for support of a large variety of different configurations.

Serial Number

The Serial Number located on the physical Remote Reader will always end with a “0.” When communicating with the NextCentury Web Platform through a Cellular Gateway (GW301), each meter is assigned a unique Transceiver Serial Number. The Serial Number for Meter 1 will end with a “1” and the serial number for Meter 2 will end with a “2.”

E _ X X X X X _

Meter
“1” - Meter 1
“2” - Meter 2

Model
“0” - RR301
“A” - RR301-TR (with integrated Transceiver)

RR301

Direct Connect

NextCentury™
SUBMETERING SOLUTIONS

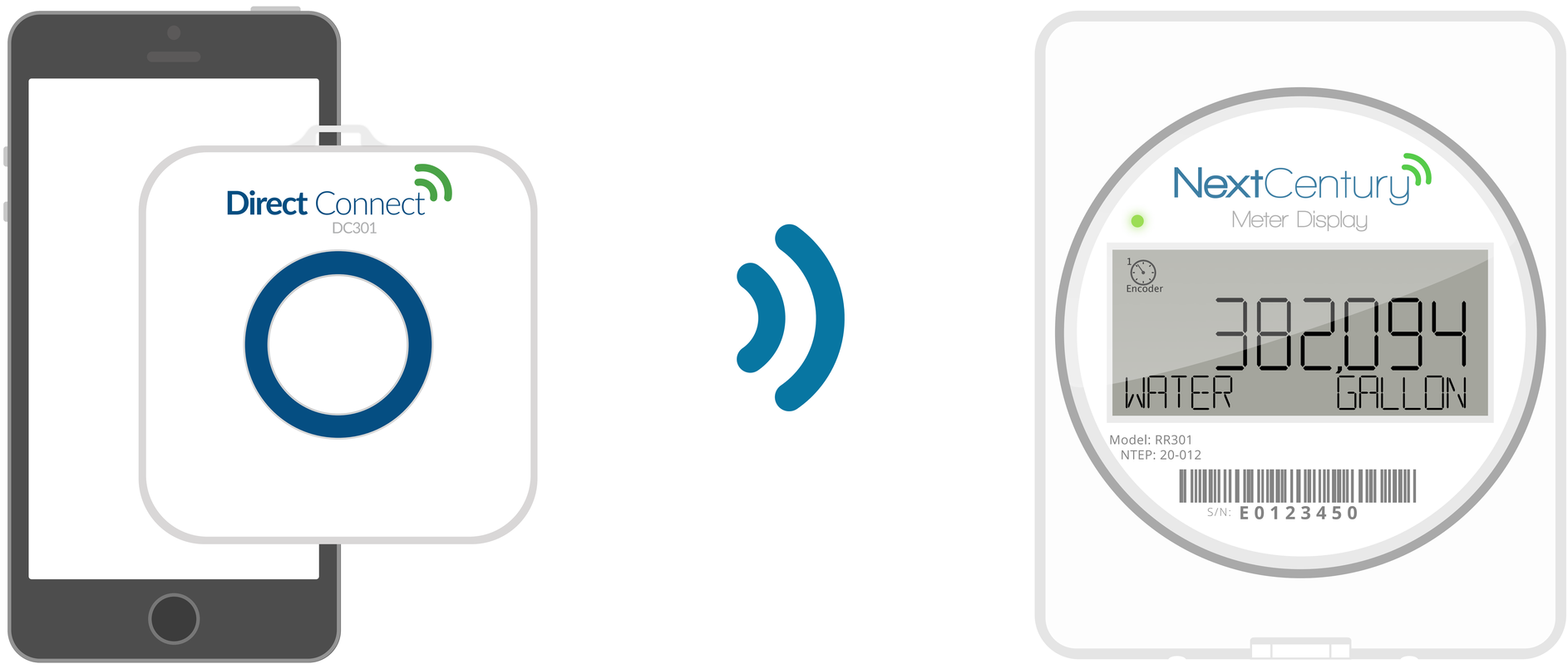

Programming

Configuring and testing the Remote Reader is done using the NextCentury Direct Connect Programmer (DC301). This simple device facilitates communications between the NextCentury Mobile App and your Remote Reader. The Direct Connect Programmer allows simple in-field programming and configuration, and does not require an Internet connection.

Mobile App Download

App Store
iOS App

Google Play
Android App

Additional Products

- **DC301:** Direct Connect Programmer (for offline configuration and programming)
- **RR301-TR:** Remote Reader with an Integrated NextCentury Transceiver
- **GW301:** Cellular Gateway
- **RE201:** Wireless Network Repeater
- **Pre-Programming:** Equipment configured and ready for install

For more, visit: www.nextcenturymeters.com or contact sales@nextcenturymeters.com